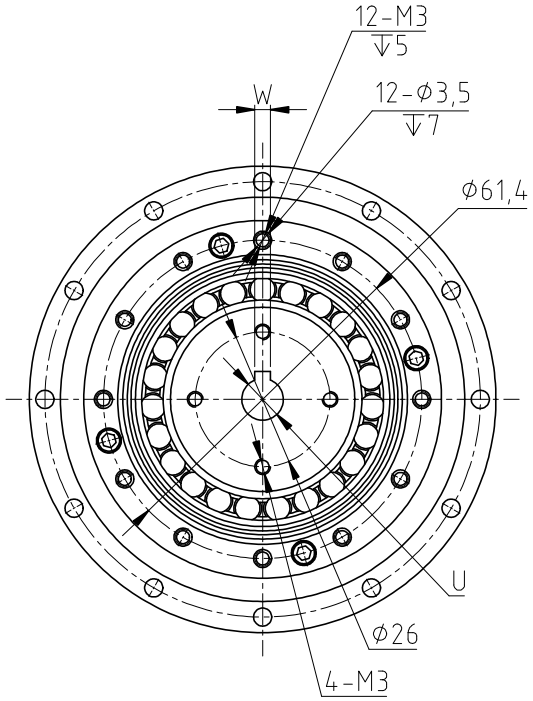

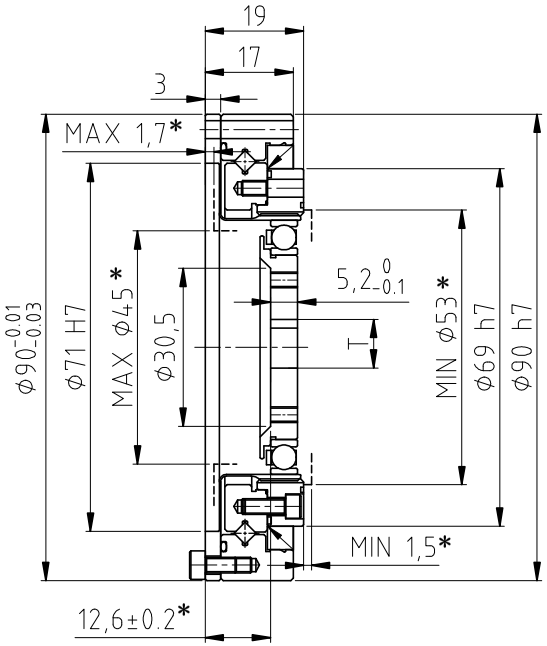

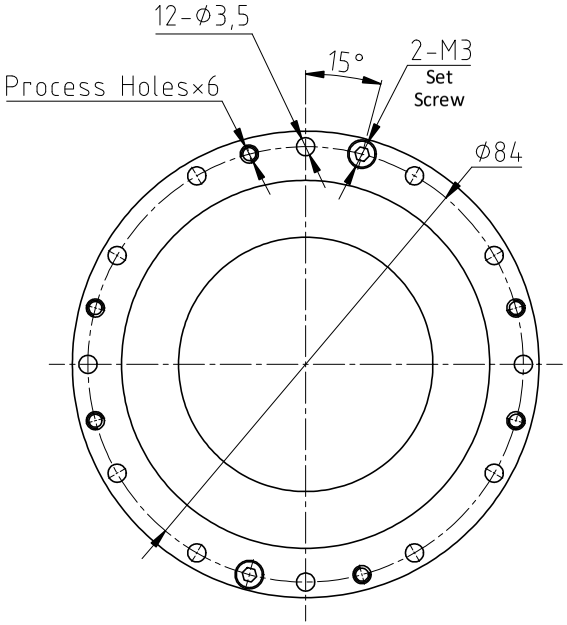

Technical requirements:
1.Please use the grease specified by our company
2.The * in the drawing is the installation reference size, please follow the installation size requirements.
3.If the product performance parameters are not specified, please refer to the latest catalog of our company for the standard values.

Laifual

FHD-20-XX-U-I				Model	Reduction ratio	Rated torque at2000r/min input		Permissible peak torque at start and stop		Permissible maximum value for average load torque		Permissible maximum momentary torque		Permissible maximum input rotational speed	Permissible average input rotational speed	Backlash	weight	Desian life
MODEL	U	T	W			Nm	kgfm	Nm	kgfm	Nm	kgfm	Nm	kgfm	r/min	r/min	Arc Sec	kg	Hour
Wave generator-A Φ8	Φ8H7	9.4 +0.1 0	3JS9/P9	20	50	17	1.7	39	4	24	2.4	69	7	6500	3500	≤20	FHD-I:0.54	≥9000
					80	24	2.4	51	5.2	33	3.4	89	9.1	6500	3500	≤20		≥10000
Wave generator-A Φ20	Φ20H7				100	28	2.9	57	5.8	34	3.5	95	9.7	6500	3500	≤20		≥10000