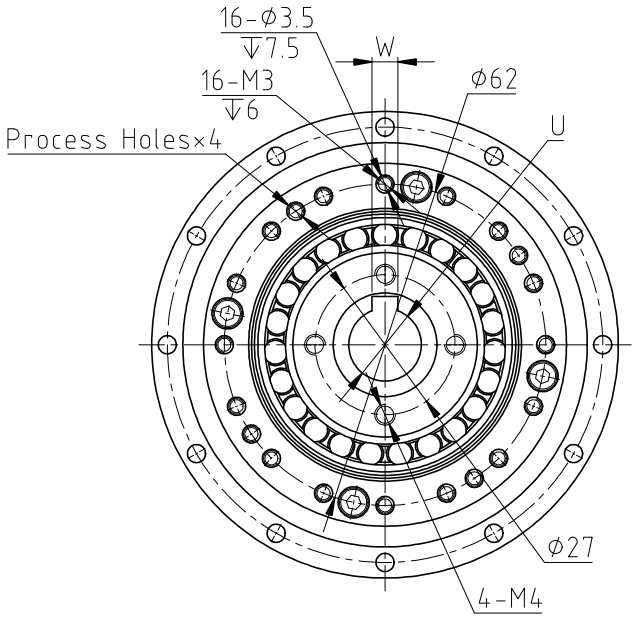

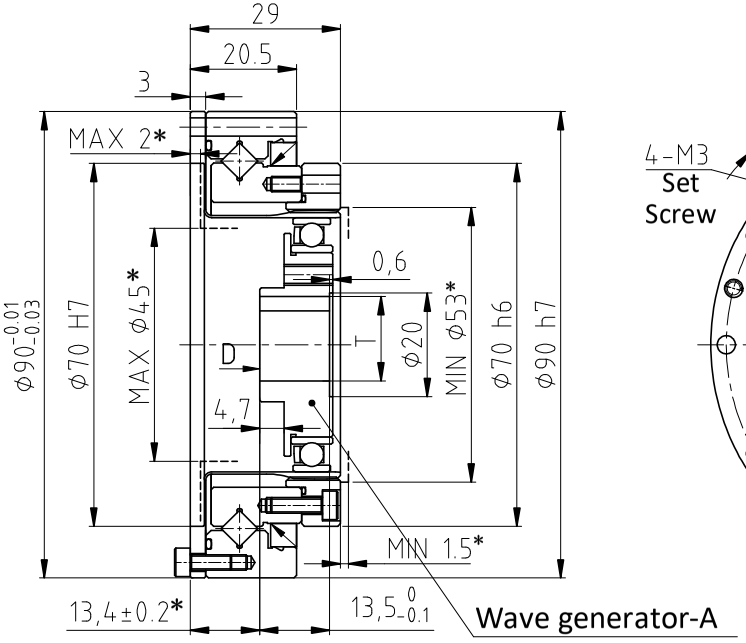

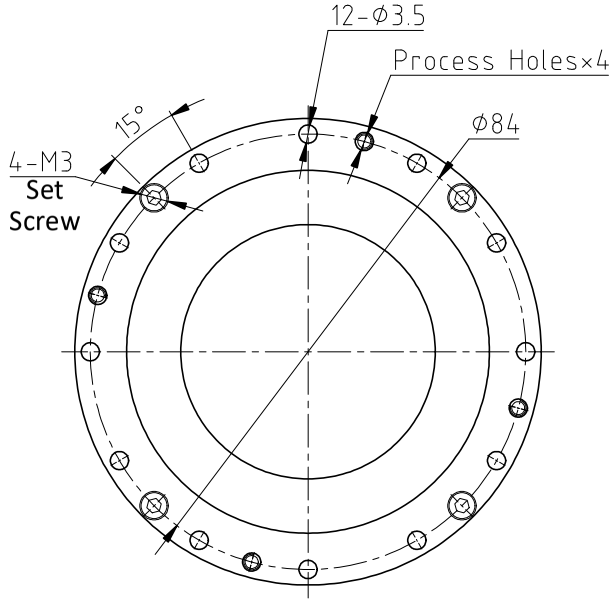

D Direction

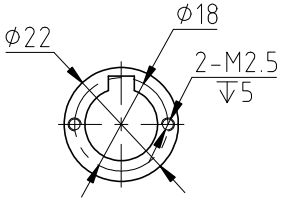

Technical requirements:
1.Please use the grease specified by our company
2.The * in the drawing is the installation reference size, please follow the installation size requirements.
3.If the product performance parameters are not specified, please refer to the latest catalog of our company for the standard values.

Laifual

FHG-20-XX-U-I				Model	Reduction ratio	Rated torque at2000r/min input		Permissible peak torque at start and stop		Permissible maximum value for average load torque		Permissible maximum momentary torque		Permissible maximum input rotational speed	Permissible average input rotational speed	Backlash	weight	Desian life
						Nm	kgfm	Nm	kgfm	Nm	kgfm	Nm	kgfm	r/min	r/min	Arc Sec	kg	Hour
MODEL	U	T	W	20	50	33	3.3	73	7.4	44	4.5	127	13	6500	3500	≤20	FHG-I:0.72	≥10000
Wave generator-A Φ8	Φ8H7	9.4 +0.1 0	3JS9/P9		80	44	4.5	96	9.8	61	6.2	165	17	6500	3500	≤20		≥15000
Wave generator-A Φ11	Φ11H7	12.8 +0.1 0	4JS9/P9		100	52	5.3	107	10.9	64	6.5	191	20	6500	3500	≤20		≥15000
Wave generator-A Φ14	Φ14H7	16.3 +0.1 0	5JS9/P9		120	52	5.3	113	11.5	64	6.5	191	20	6500	3500	≤20		≥15000
					160	52	5.3	120	12.2	64	6.5	191	20	6500	3500	≤20		≥15000