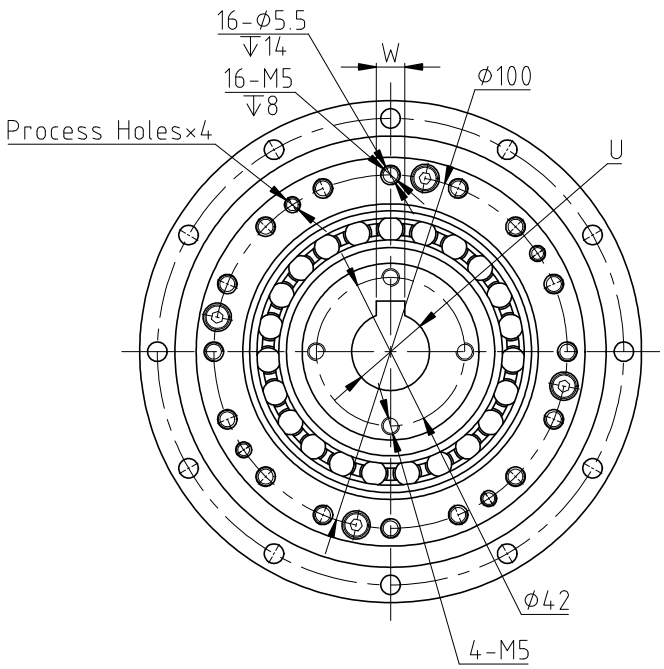

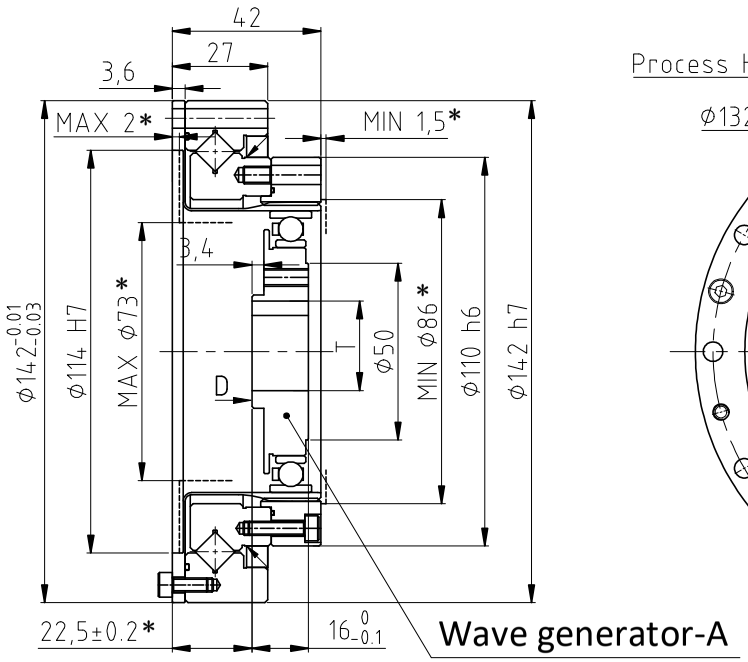

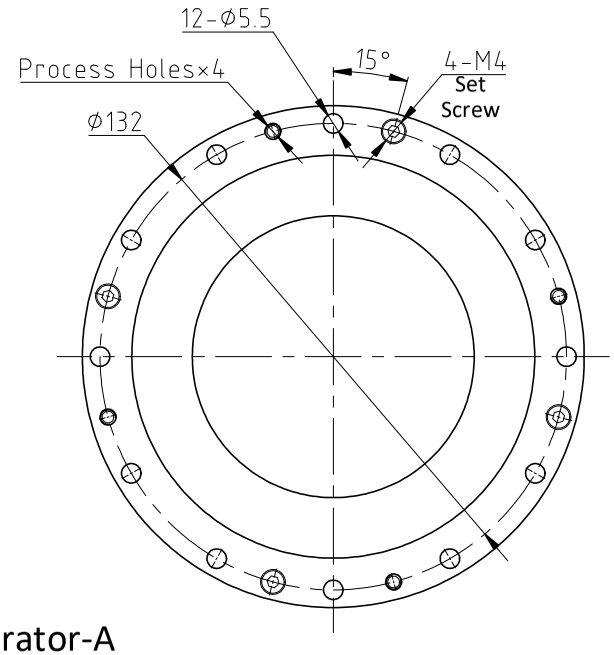

D Direction

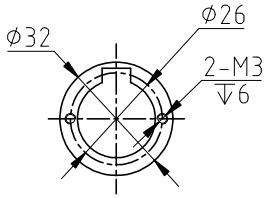

Technical requirements:
1.Please use the grease specified by our company
2.The * in the drawing is the installation reference size, please follow the installation size requirements.
3.If the product performance parameters are not specified, please refer to the latest catalog of our company for the standard values.

Laifual

FHG-32-XX-U-I

MODEL	U	T	W
Wave generator-A Φ14	Φ14H7	$16.3^{+0.1}_{0}$	5JS9/P9
Wave generator-A Φ19	Φ19H7	$21.8^{+0.1}_{0}$	6JS9/P9
Wave generator-A Φ22	Φ22H7	$24.8^{+0.1}_{0}$	6JS9/P9
		$25.3^{+0.1}_{0}$	8JS9/P9

Model	Reduction ratio	Rated torque at2000r/min input		Permissible peak torque at start and stop		Permissible maximum value for average load torque		Permissible maximum momentary torque		Permissible maximum input rotational speed	Permissible average input rotational speed	Backlash	weight	Desian life
		Nm	kgfm	Nm	kgfm	Nm	kgfm	Nm	kgfm	r/min	r/min	Arc Sec	kg	Hour
32	50	99	10	281	29	140	14	497	51	4800	3500	≤20	FHG-I:2.54	≥15000
	80	153	16	395	40	217	22	738	75	4800	3500	≤20		≥15000
	100	178	18	433	44	281	29	841	86	4800	3500	≤20		≥15000
	120	178	18	459	47	281	29	892	91	4800	3500	≤20		≥15000
	160	178	18	484	49	281	29	892	91	4800	3500	≤20		≥15000